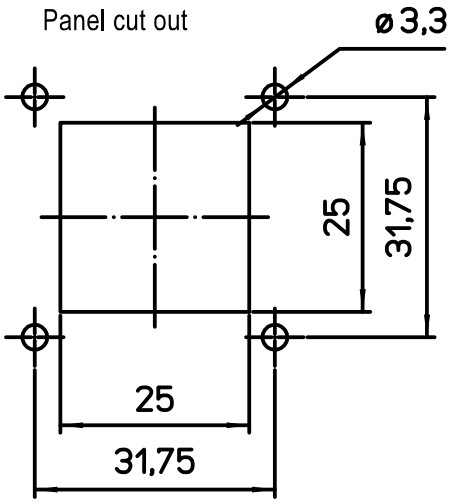

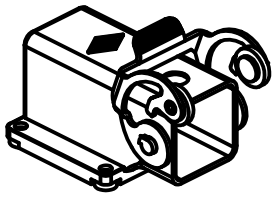

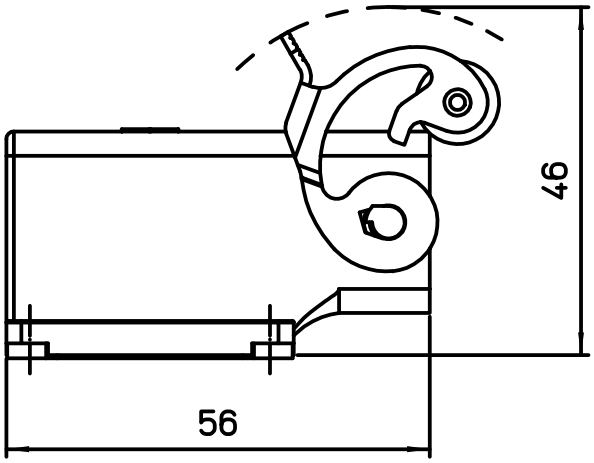

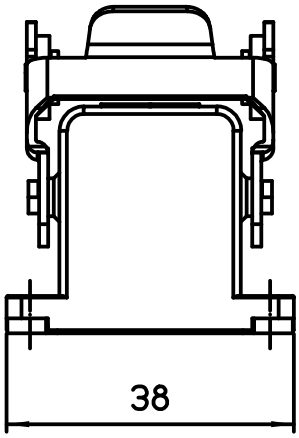

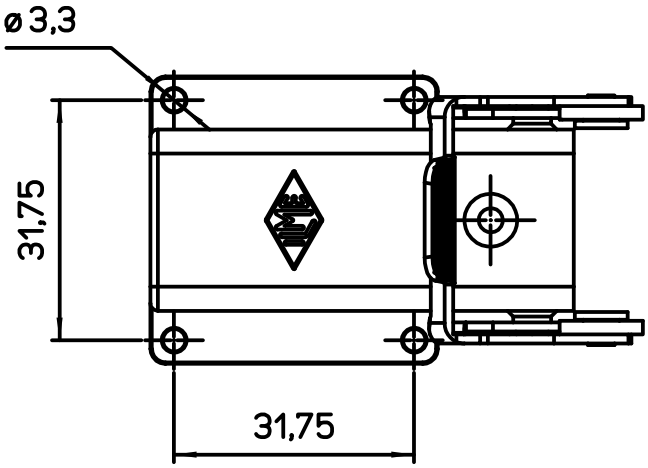

All rights reserved
Diritti riservati

dimensions in mm	CKAX 03 IA4
Date 12/09/17	Metal angled bulkhead housing, stainless steel lever
Sign. Radice	

Scale 1:1