Diritti riservati All rights reserved

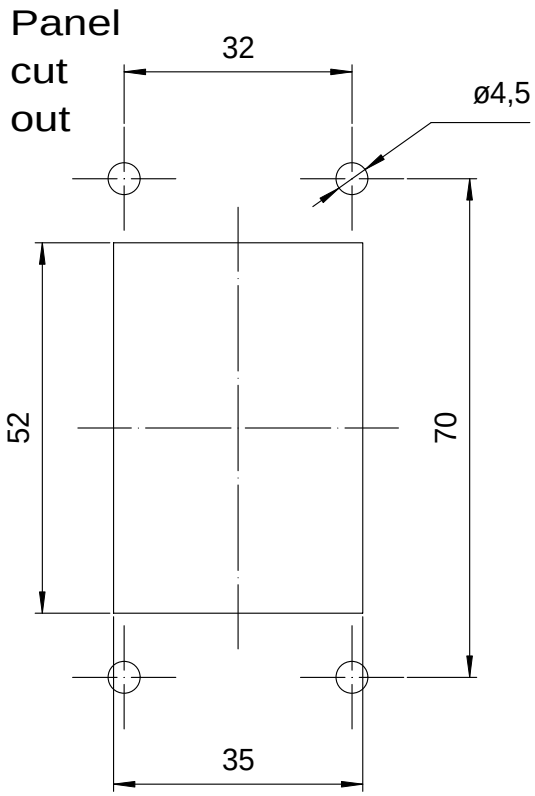

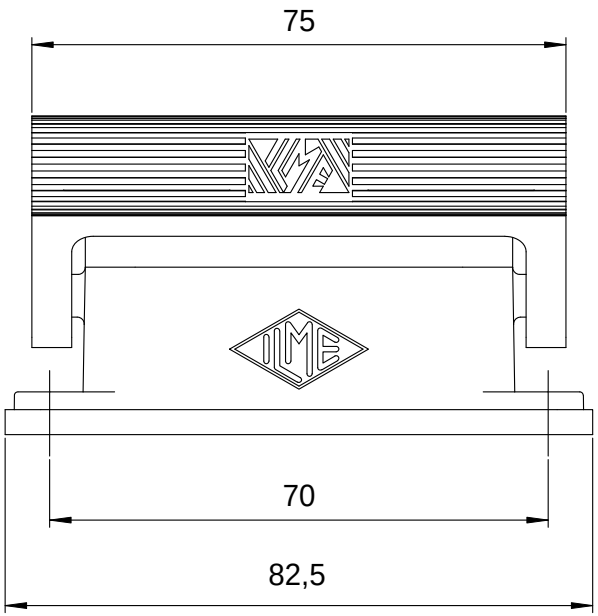

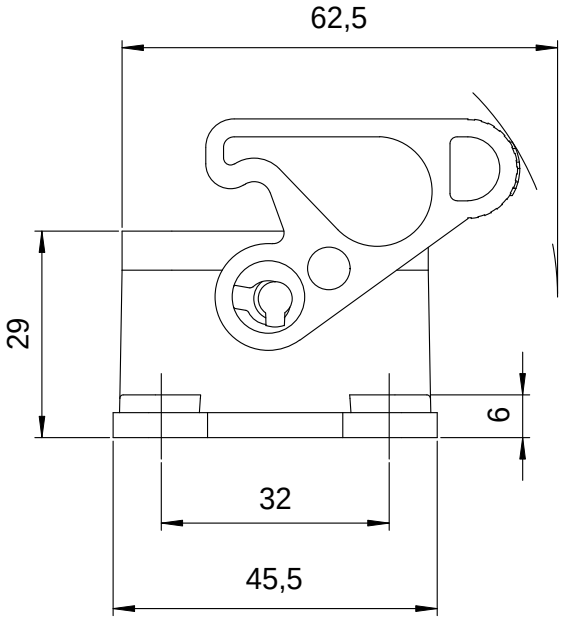

dimensions in mm	CHIN 06 L	Scale 1:2
Date 23/06/14	Bulkhead mounting housing, 1 lever - LS TYPE	
Sign Radice		