Diritti riservati All rights reserved

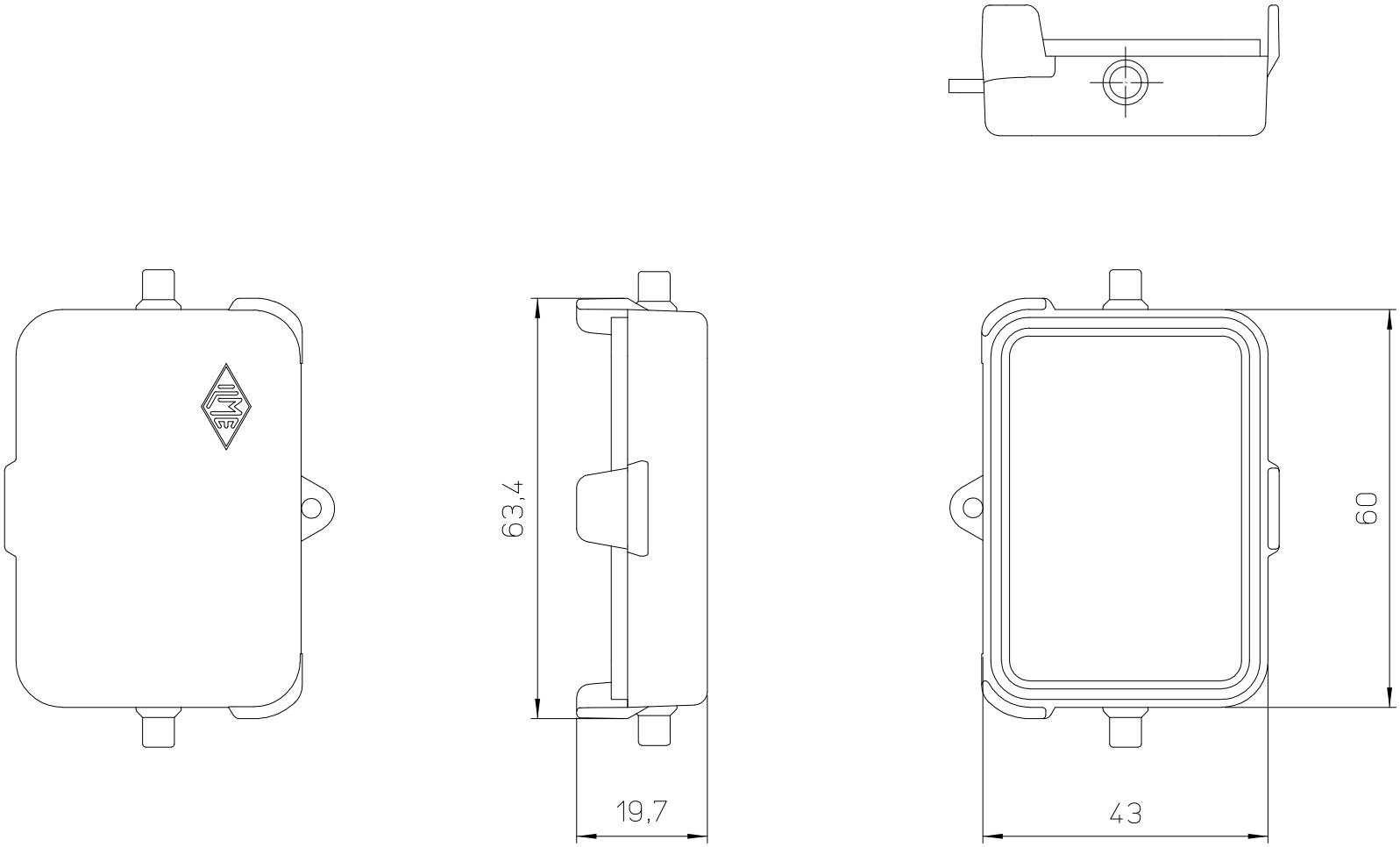

dimensions in mm	CHCR 06 L	Scale	
Date 15/12/16	Cover - 180°	1:1	
Sign. C. Mainini			